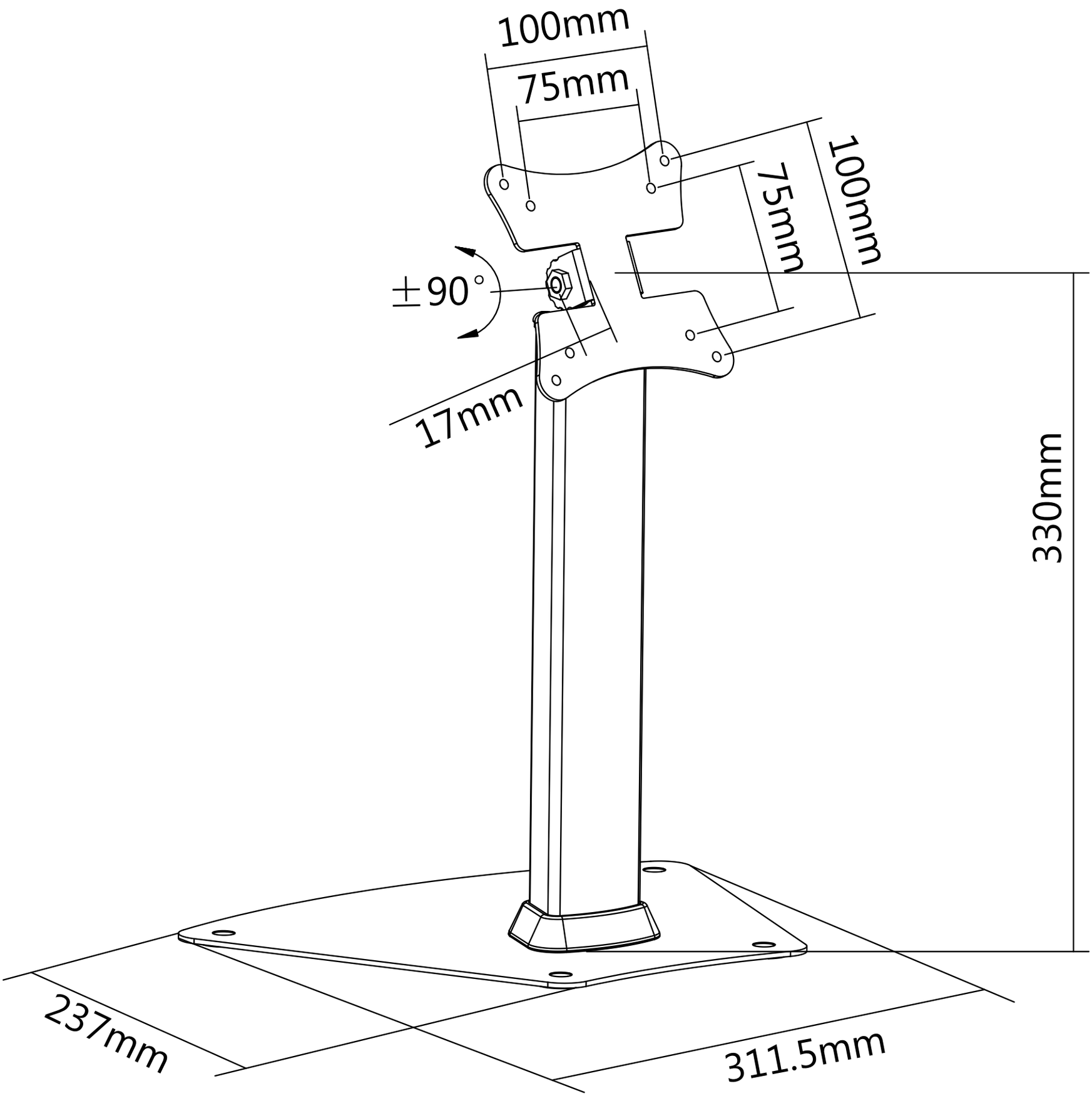
100mm
75mm
75mm
100mm
±90°
17mm
330mm
237mm
311.5mm