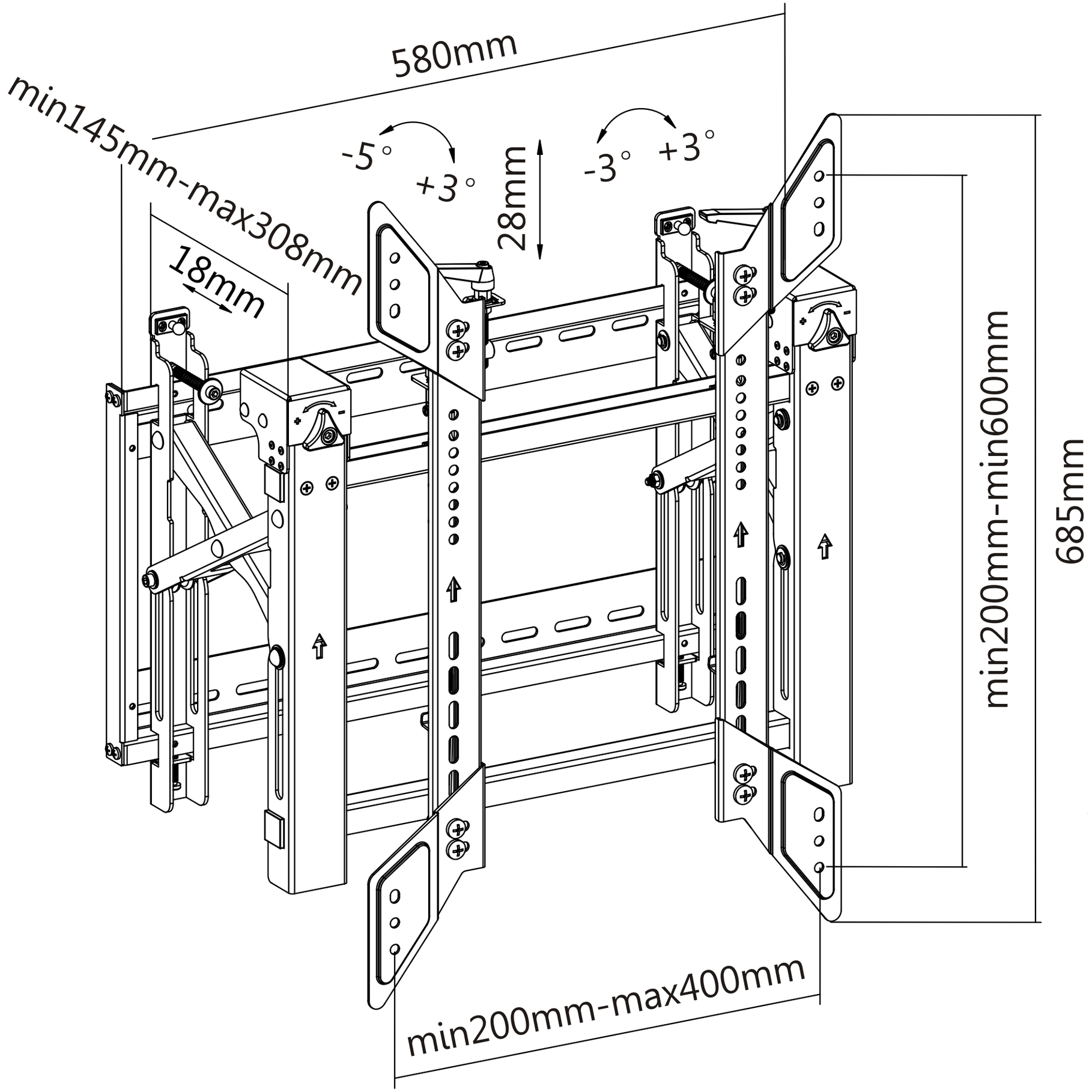
580mm
min145mm-max308mm
18mm
-5°
+3°
28mm
-3°
+3°
min200mm-min600mm
685mm
min200mm-max400mm