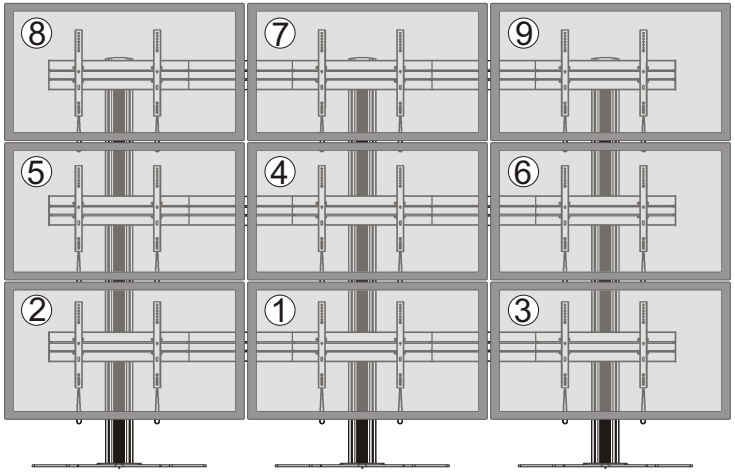

Note: The displays are installed by the numerical order given.

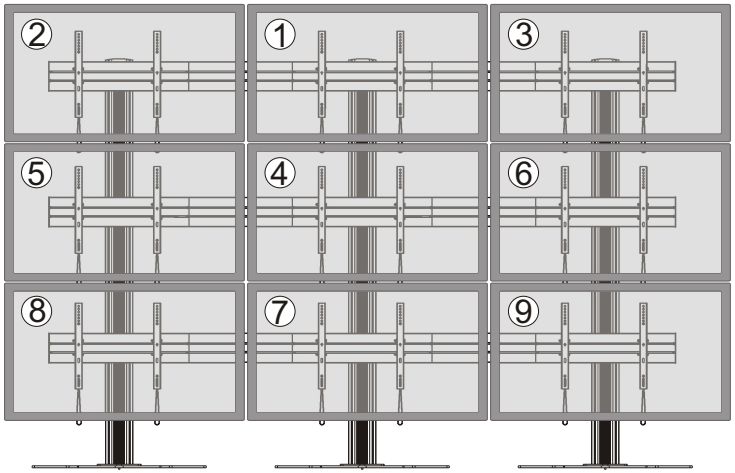

Note: The angle of displays are adjusted by the numerical order given.

Maintenance

- Check that the bracket is secure and safe to use at regular intervals(at least every three months).
- Please contact your distributor if you have any questions.

INSTALLATION MANUAL

Video Wall Stand and Accessories

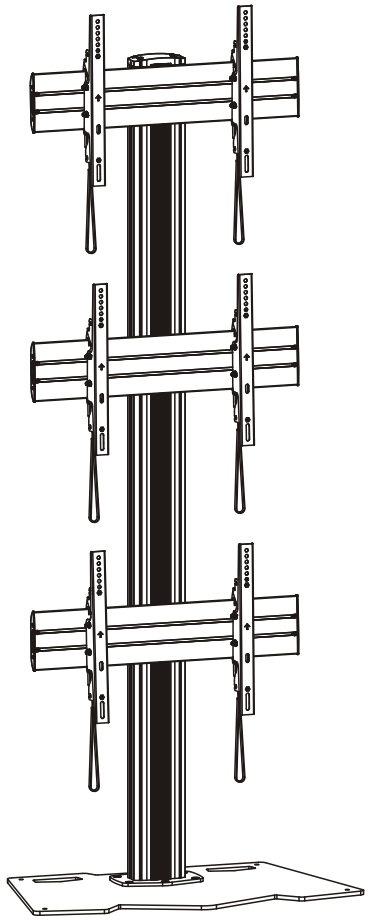

Optional Accessories

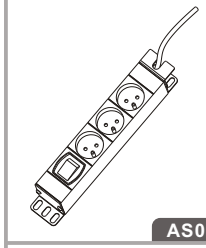

AS01K

Note: The accessories are not standard equipped. The accessories will be selected according to user requirement.

CAUTION: DO NOT EXCEED RATED LISTED WEIGHT. SERIOUS INJURY OR PROPERTY DAMAGE MAY OCCUR!

AS01346FP	300x300/400x200 400x400/600x400	55" MAX	50kgx3 (110lbsx3) RATED

ISSUED: OCT. 2014

NOTE: Read the entire instruction manual before you start installation and assembly.

⚠ WARNING

- Do not begin the installation until you have read and understood all the instructions and warnings contained in this installation sheet. If you have any questions regarding any of the instructions or warnings, please contact your local distributor.
- This mounting bracket was designed to be installed and utilised ONLY as specified in this manual. Improper installation of this product may cause damage or serious injury.
- Always use an assistant or mechanical lifting equipment to safely lift and position the equipment.
- Tighten screws firmly, but do not over tighten. Over tightening can cause damage to the items, This greatly reduces their holding power.
- This product is intended for indoor use only. Using this product outdoors could lead to product failure and personal injury.

IMPORTANT: Ensure that you have received all parts according to the component checklist prior to installation. If any parts are missing or faulty, telephone your local distributor for a replacement.

AS01346FP

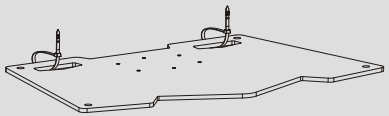
steel plate (x1)
A

connecting fitting (x3)
B

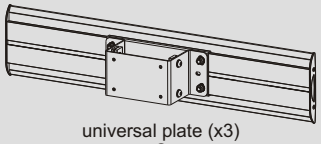
universal plate (x3)
C

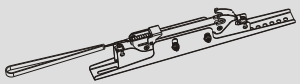
adapter bracket (x6)
D

column (x1)
E

rubber pad (x4)
F

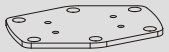
connecting plate (x1)
G

top cover (x1)
H

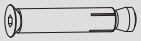
iron expansion bolt (x6)
I

cable clamp (x12)
J

M8x16 (x4)
K

M8x16 (x6)
L

M8x40(x4)
M

3mm Allen key (x1)
N

4mm Allen key (x1)
O

5mm Allen key (x1)
P

6mm Allen key (x1)
Q

Package M (x3)

M5x14 (x4)
M-A

M6x14 (x4)
M-B

M8x20 (x4)
M-C

M6x30 (x4)
M-D

M8x30 (x4)
M-E

washer (x4)
M-F

small spacer (x8)
M-G

big spacer (x4)
M-H

AS01K (The following accessories are optional)

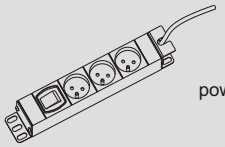
power socket (x1)
T-H

ST4.8x9.5 (x4)
P-G

1. Installing the Rubber Pads

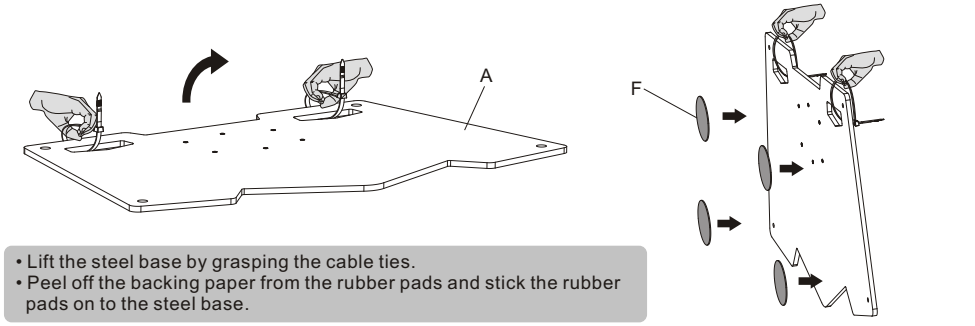

- Lift the steel base by grasping the cable ties.
- Peel off the backing paper from the rubber pads and stick the rubber pads on to the steel base.

2. For the model AS01K installation
(Assembly based on the accessories selected by user.)

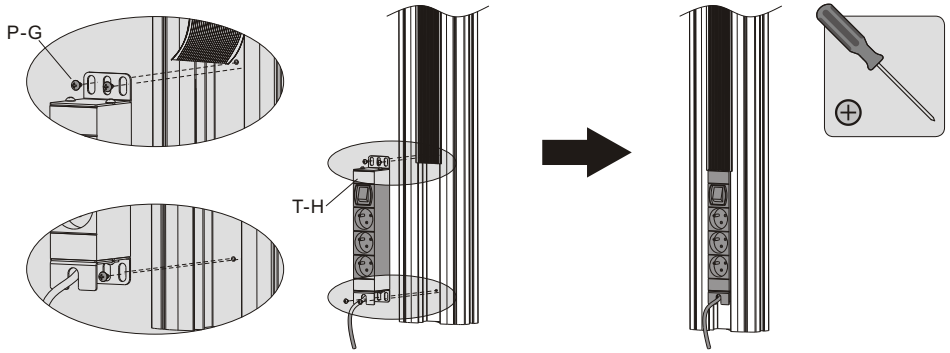

Attach the power socket to the back of column using the appropriate screws. Tighten all screws with a phillips screwdriver.

3a. For Concrete Floor Mounting

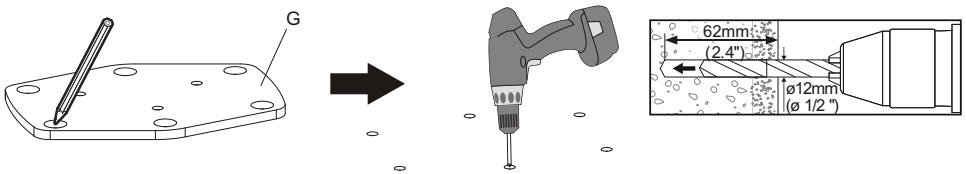

Mark the exact location of mounting holes and pre-drill these mounting holes with a 12mm drilling bit to at least 62mm in depth. Remove the dust in the holes.

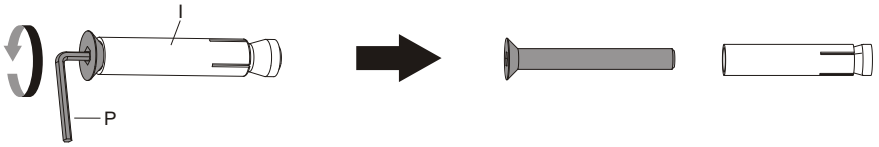

First tighten the iron expansion bolts with an Allen key, and then loosen the iron expansion bolts in order to separate the bolts and the expansion tubes.

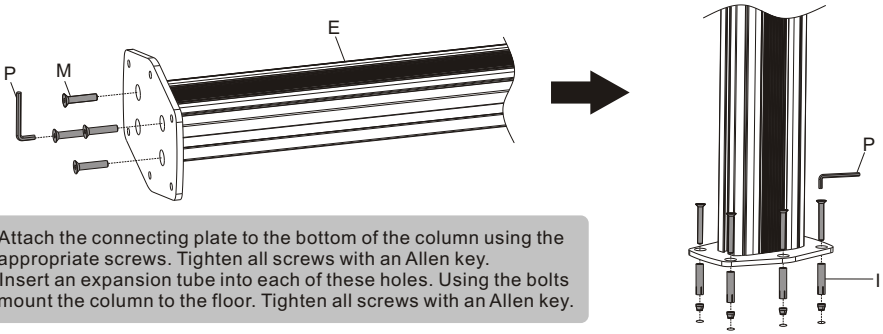

- Attach the connecting plate to the bottom of the column using the appropriate screws. Tighten all screws with an Allen key.
- Insert an expansion tube into each of these holes. Using the bolts mount the column to the floor. Tighten all screws with an Allen key.

3b. For the Floor Stand Mounting

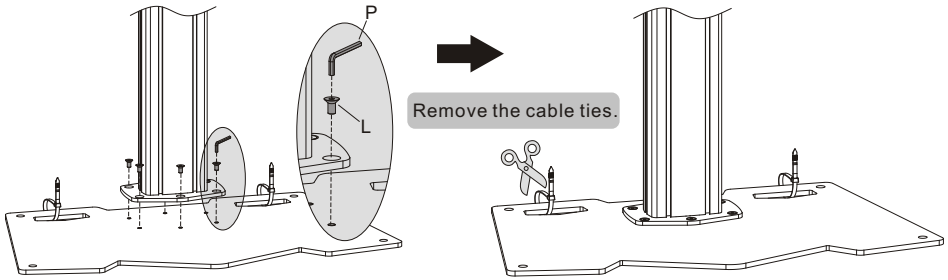

Attach the column to the steel base using the appropriate screws. Tighten all screws with an Allen key.

4. Installing the Universal Plates

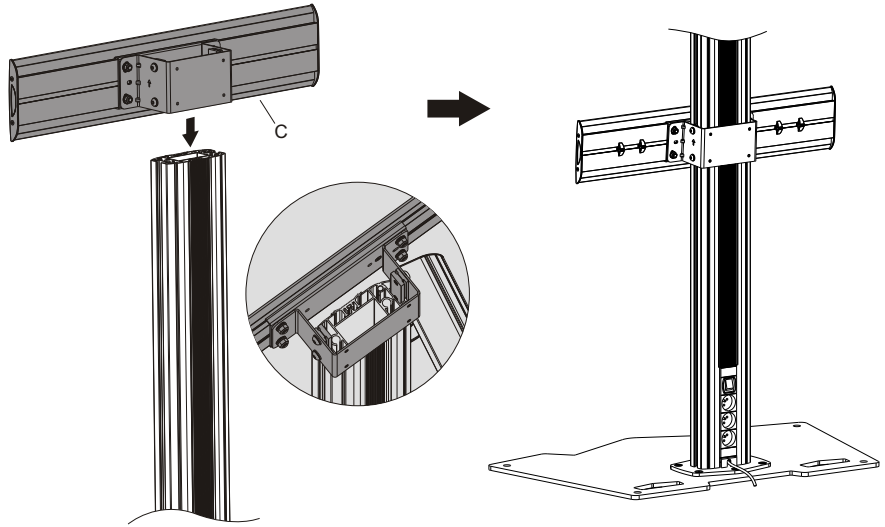

Insert the universal plates to the column along the column rails respectively.
NOTE: With the arrow pointing upward.

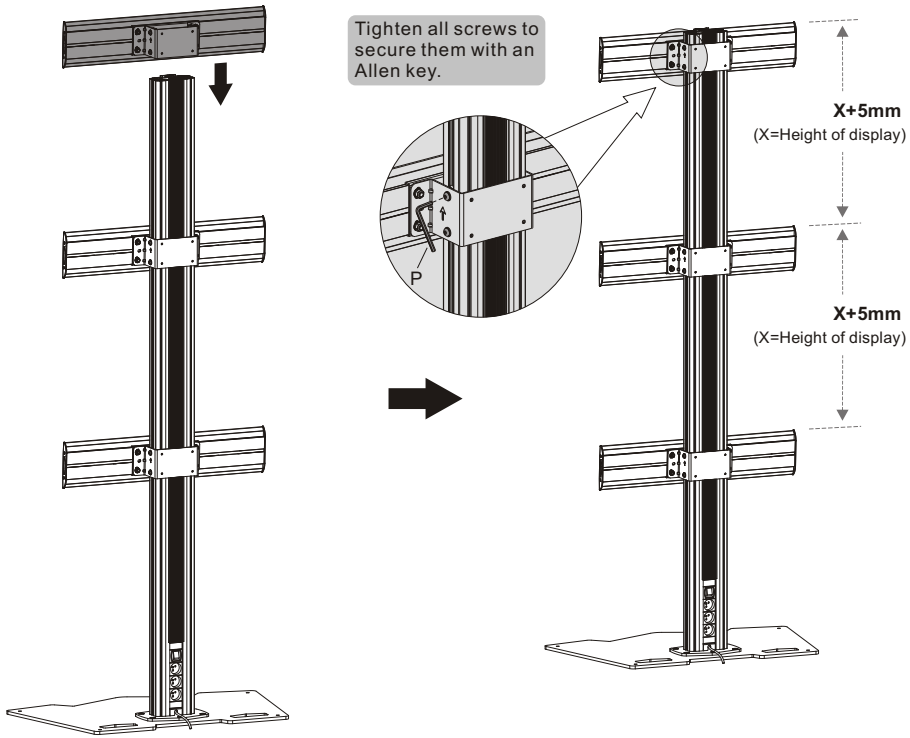

5. Installing the Top Cover

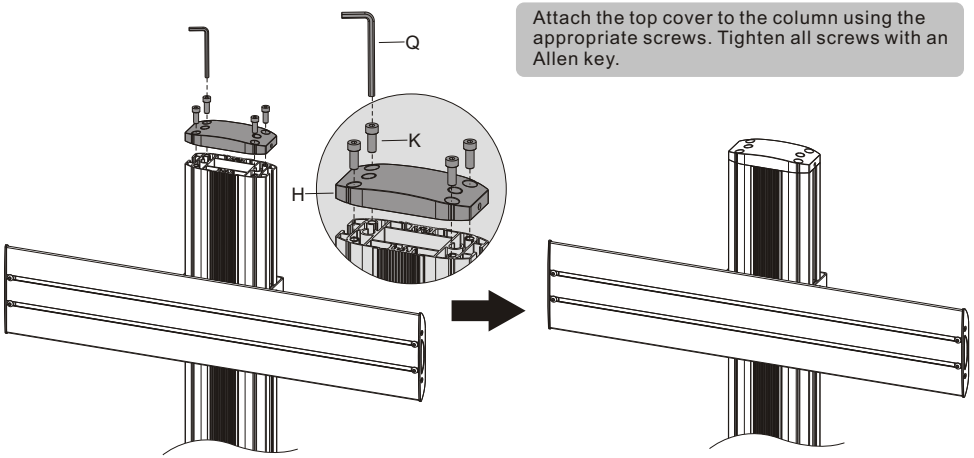

6. Installing the Adapter Brackets

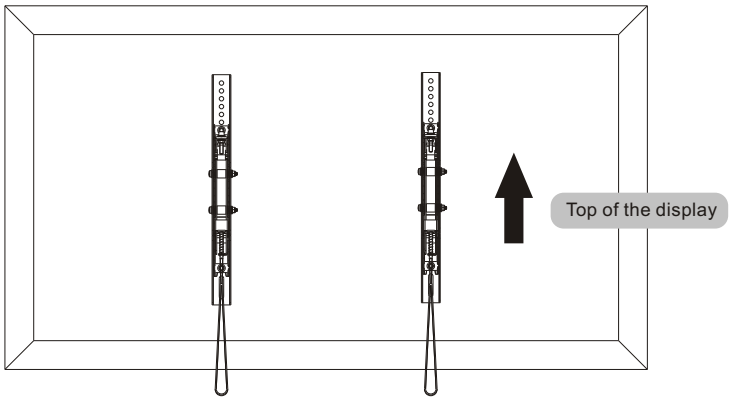

6-1 For Flat Back Screens

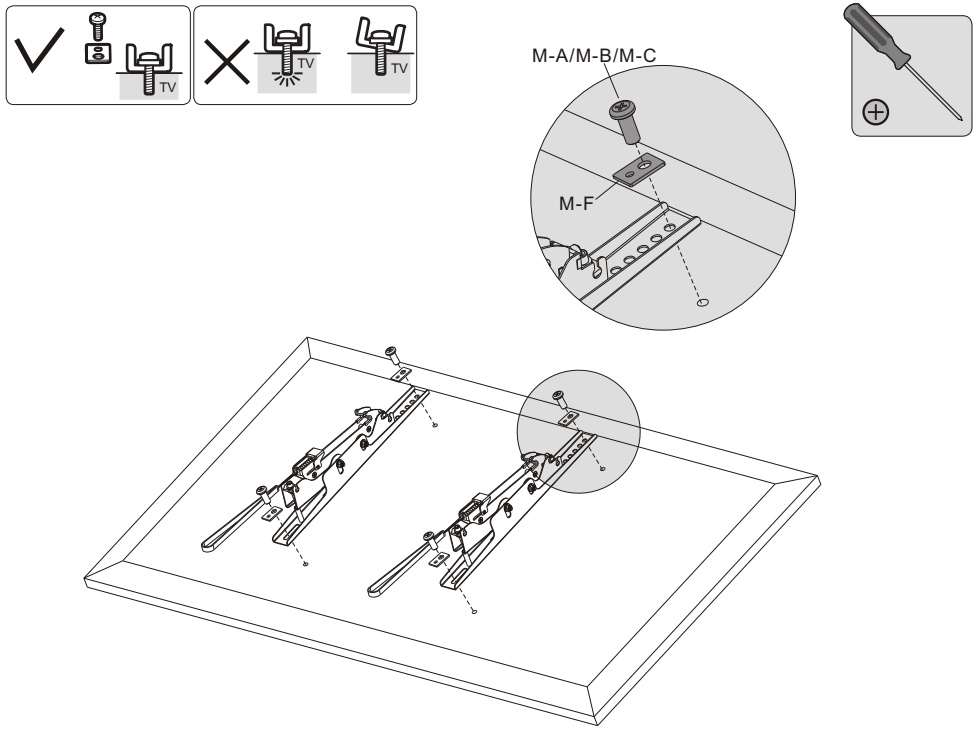

6-2 For Recessed Back Screens or to Access A/V Inputs

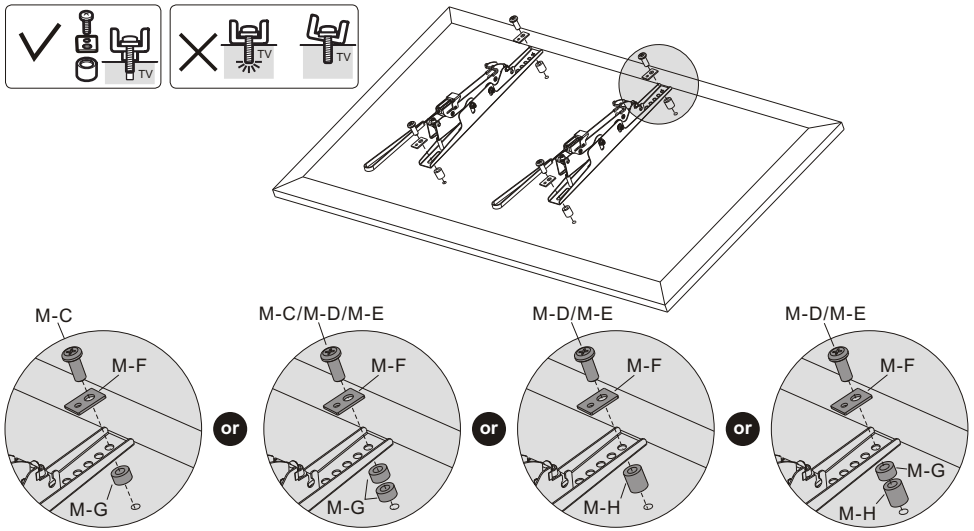

Note: Choose the appropriate screws, washers and spacers (if necessary) according to the type of screens.
- Position the adapter brackets as close as possible to the center of the displays.
- Screw the adapter brackets onto the displays.

Tighten all screws but do not over tighten.

7. Hanging the Displays onto the Universal Plates

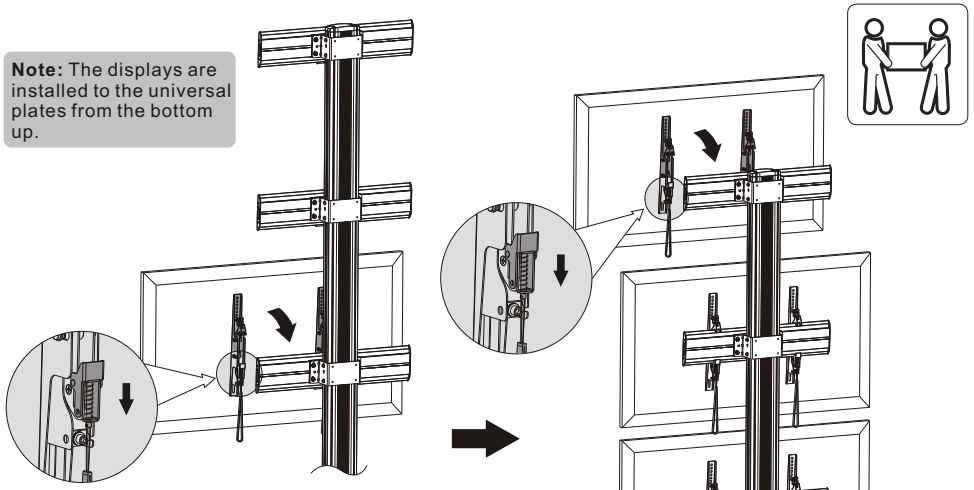

Note: The displays are installed to the universal plates from the bottom up.

- Lift the display carefully and pull downward two straps at the same time , then hook the adapter brackets to the universal plate. Fasten the adapter brackets to the universal plate by releasing the straps.
- The other displays are hung onto the universal plates in the same way

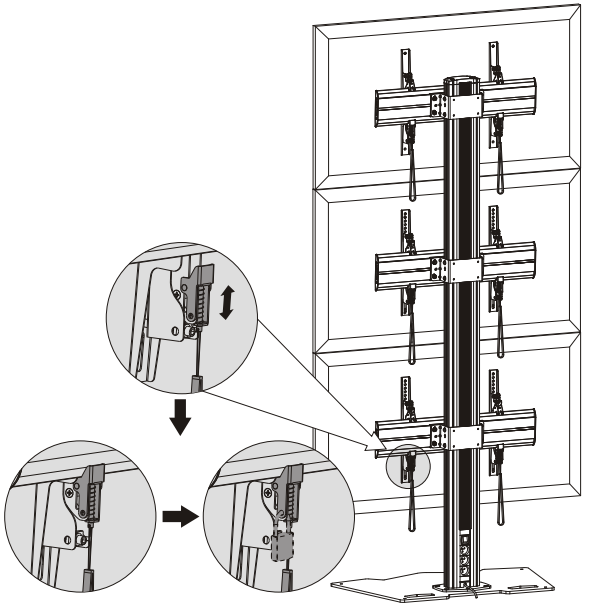

Use the padlocks to prevent the displays from being stolen (The padlocks are not included).

8. Micro-Adjustment

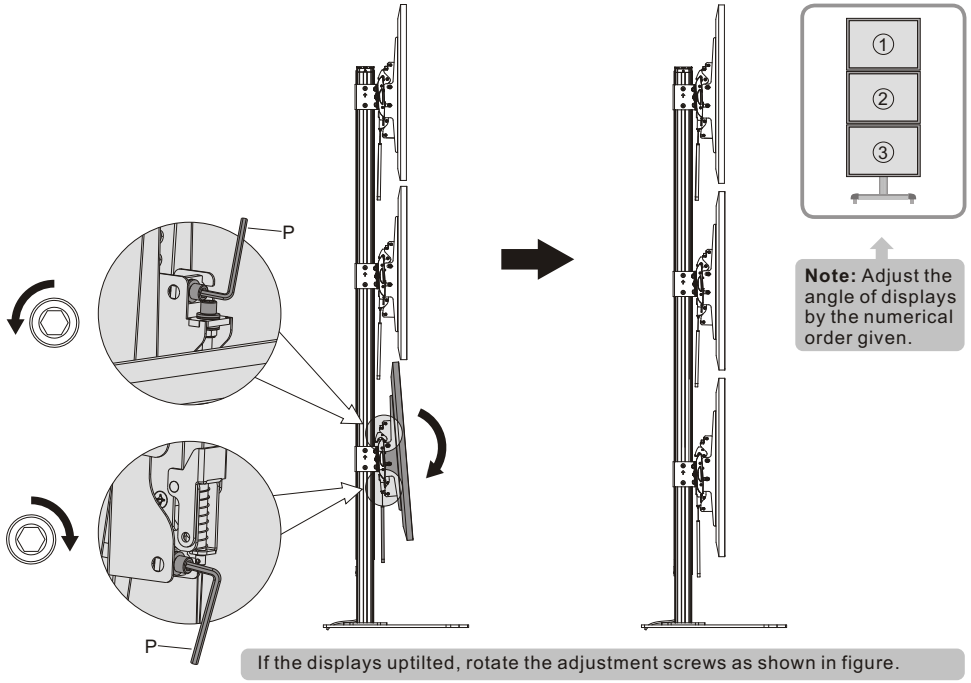

Note: Adjust the angle of displays by the numerical order given.

If the displays uptilted, rotate the adjustment screws as shown in figure.

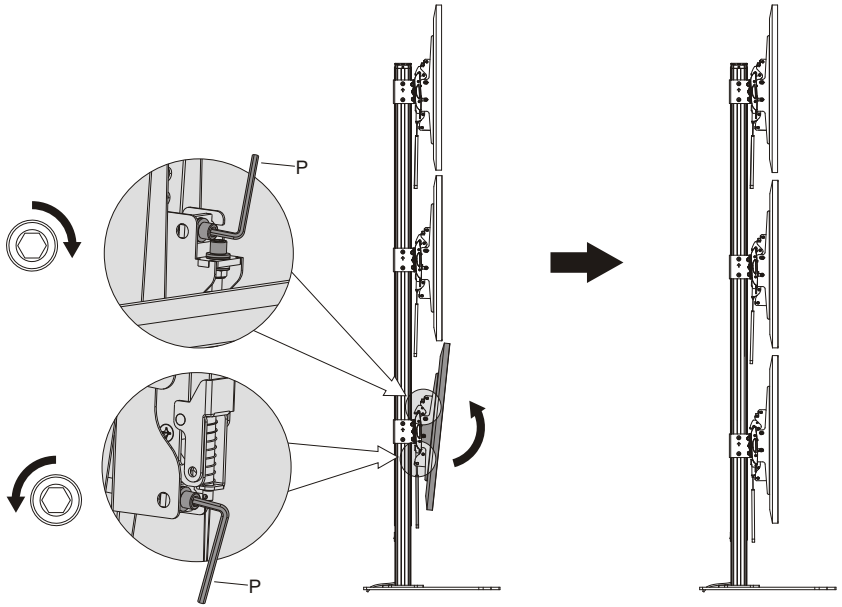

If the displays tilted down, rotate the adjustment screws as shown in figure.

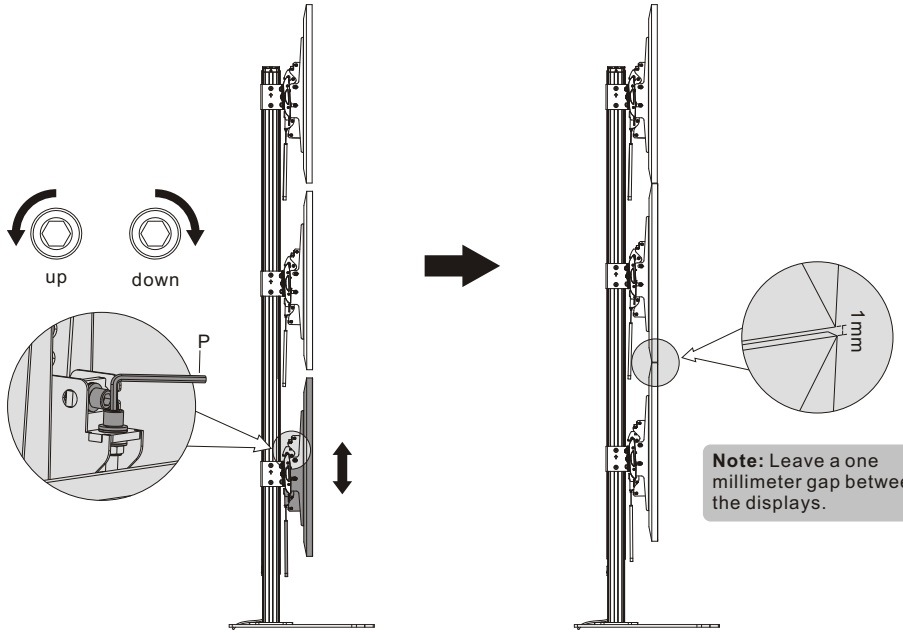

Note: Leave a one millimeter gap between the displays.

Rotate the adjustment screws as shown in figure to make a one millimeter gap left between the displays.

9. Cable Management

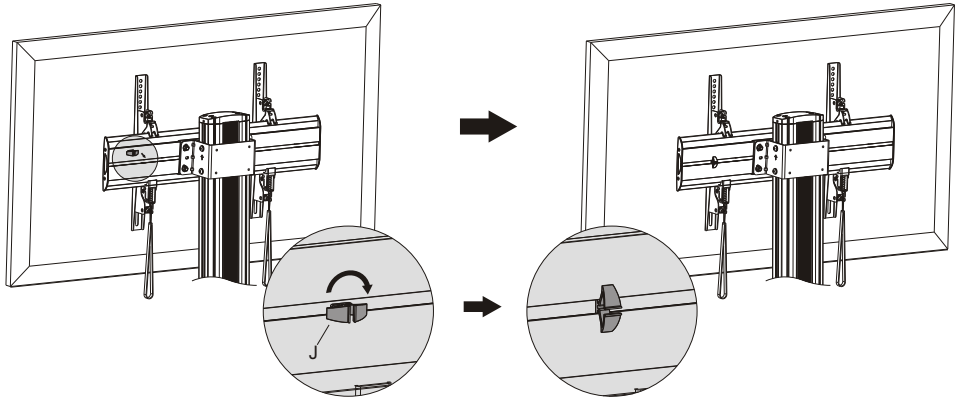

Insert the cable clamps horizontally into the plate slots, then turn the cable clamps to the vertical to secure them.

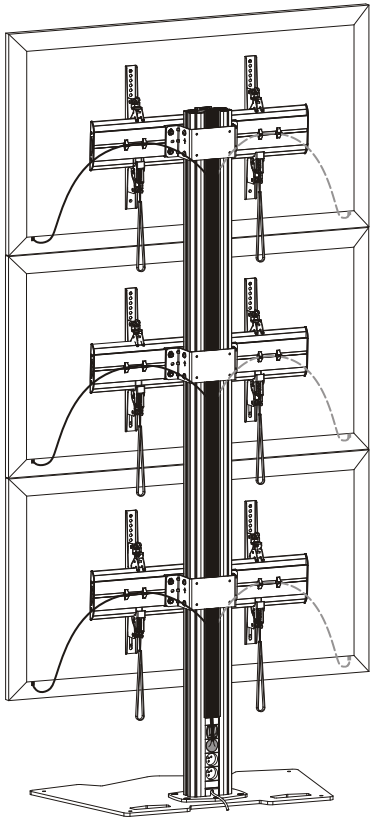

Run the cables through the cable clamps and the rubber strip.

10. Adjustment

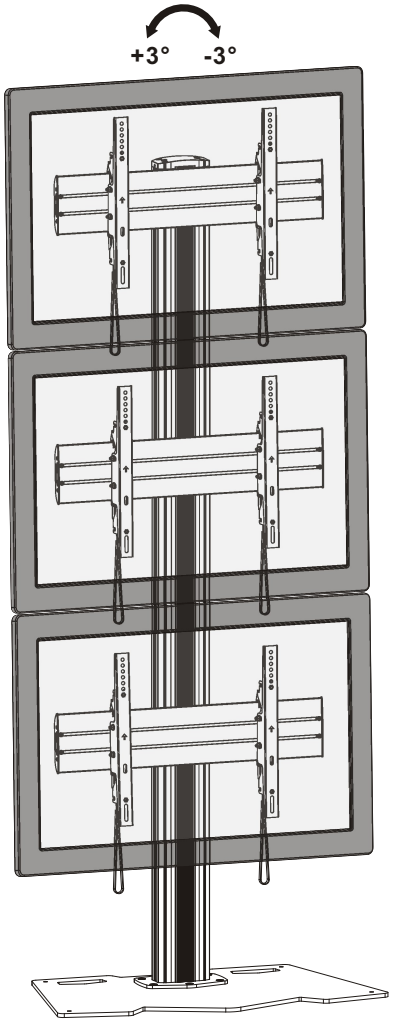

11. Multi-screen Combination Solution

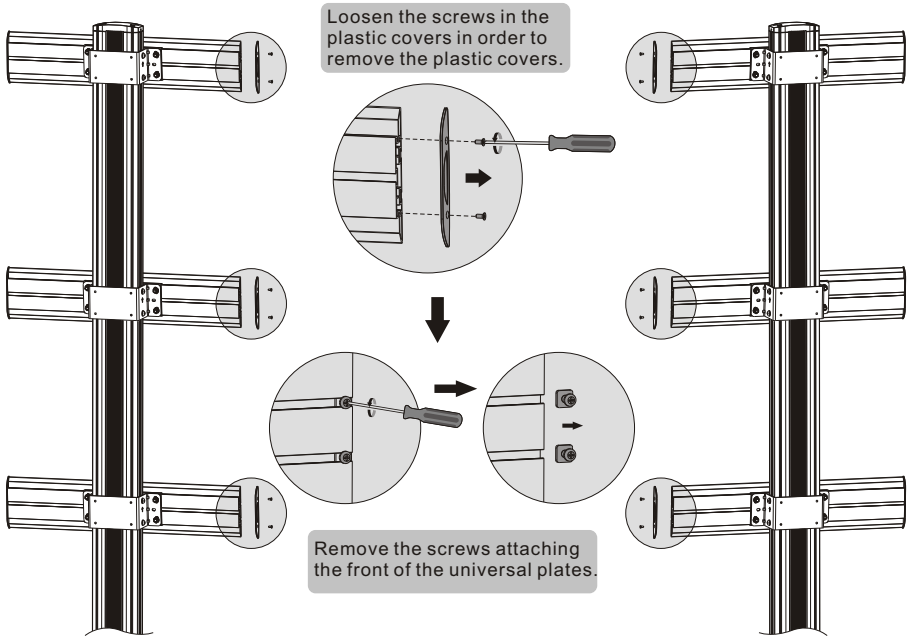

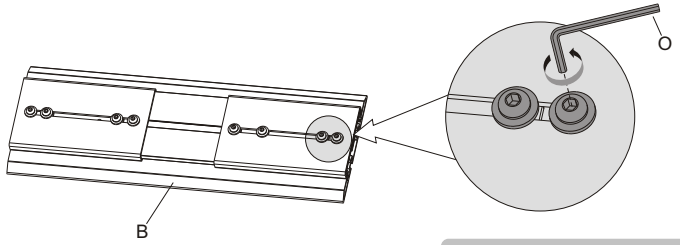

Loosen the screws in the connecting fittings in order to slide the connecting attachments to both sides of the connecting fittings. Then tighten all screws to secure.

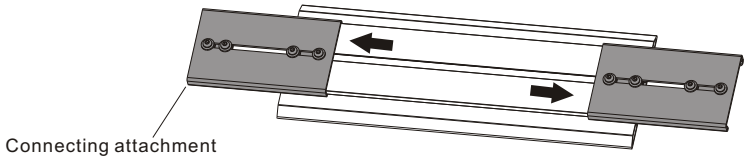

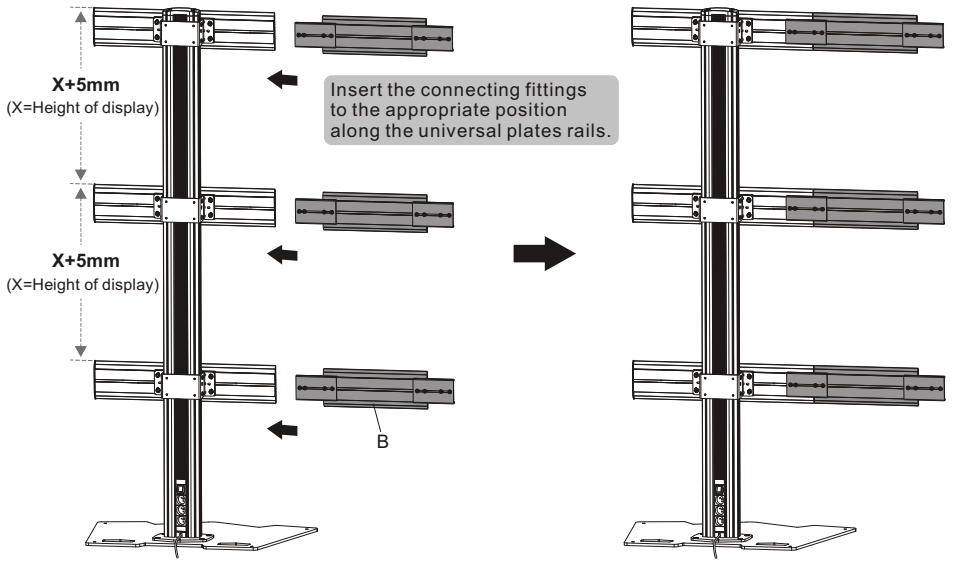

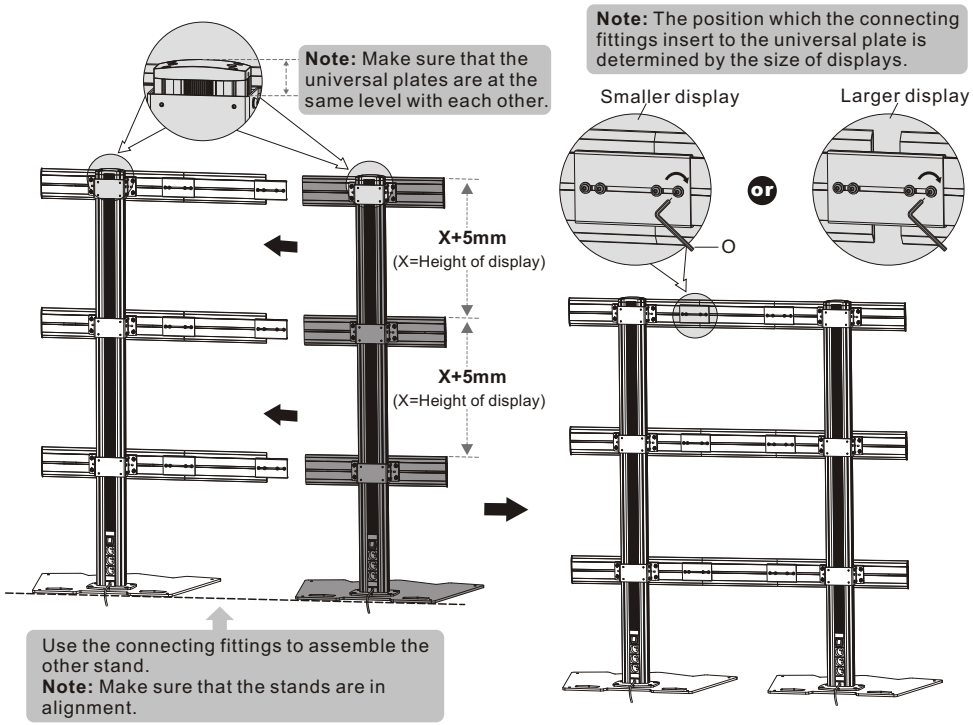

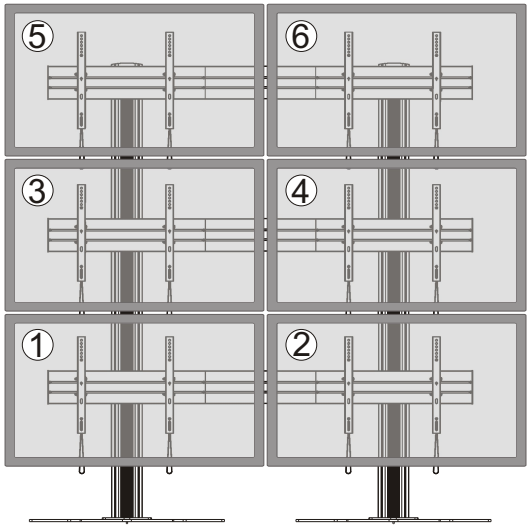

Note: The displays are installed by the numerical order given.

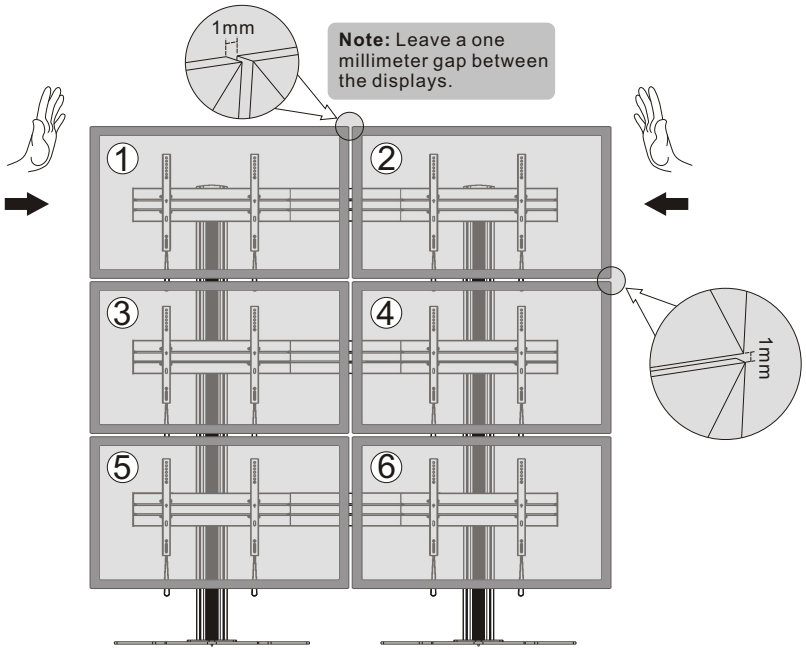

Note: The angle of displays are adjusted by the numerical order given.